HPL-1064-CW/100~500W

WATER COOLING HIGH POWER LD PUMPED ALL-SOLID-STATE LASER

All solid state high power CW laser at 1064nm has the features of ultra compact, long lifetime, low cost and easy operating, which is used in scientific experiment, optical instrument, optical sensor, measurement, spectrum analysis, etc.

SPECIFICATIONS

Wavelength (nm)	1064±1
Operating mode	CW
Power (W)	100, 150, 200, 300, 400, 500
Ave power stability (over 4 hours)	<3%, <5%, 10%
Warm-up time (minutes)	<10
Beam divergence, full angle (mrad)	<3.5
Beam diameter at the aperture (mm)	~9.0
Beam height from base plate (mm)	65.0
Cooled method	Water Cooled
Operating temperature (℃)	15~35
Power supply (220/110VAC)	PSU-HPL-CW(2U)
Expected lifetime (hours)	10000
Warranty period	1 year
Pilot light (optional)	5mW @650nm

HPL-1064-CW

375 (L) ×165(W) ×105(H) mm^3, 7.8kg

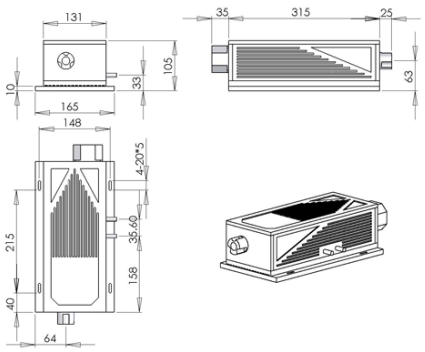

PSU-HPL-CW(2U)

423(L) ×255(W) ×87(H) mm^3, 5.6kg

Water chiller

474 (L)×574(W)×875(H) mm^3 , 71kg, 100-200W laser

504 (L)×624(W)×935(H) mm^3 , 95kg, 300-500W laser