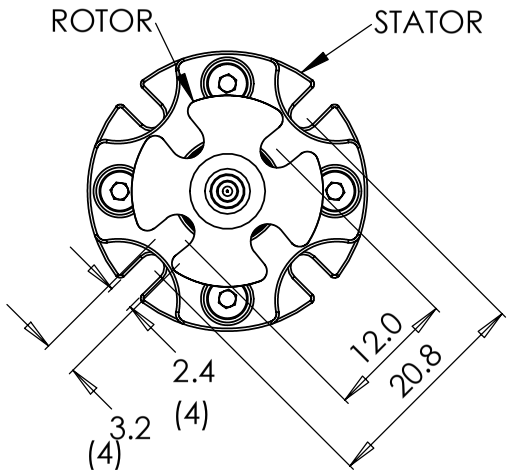

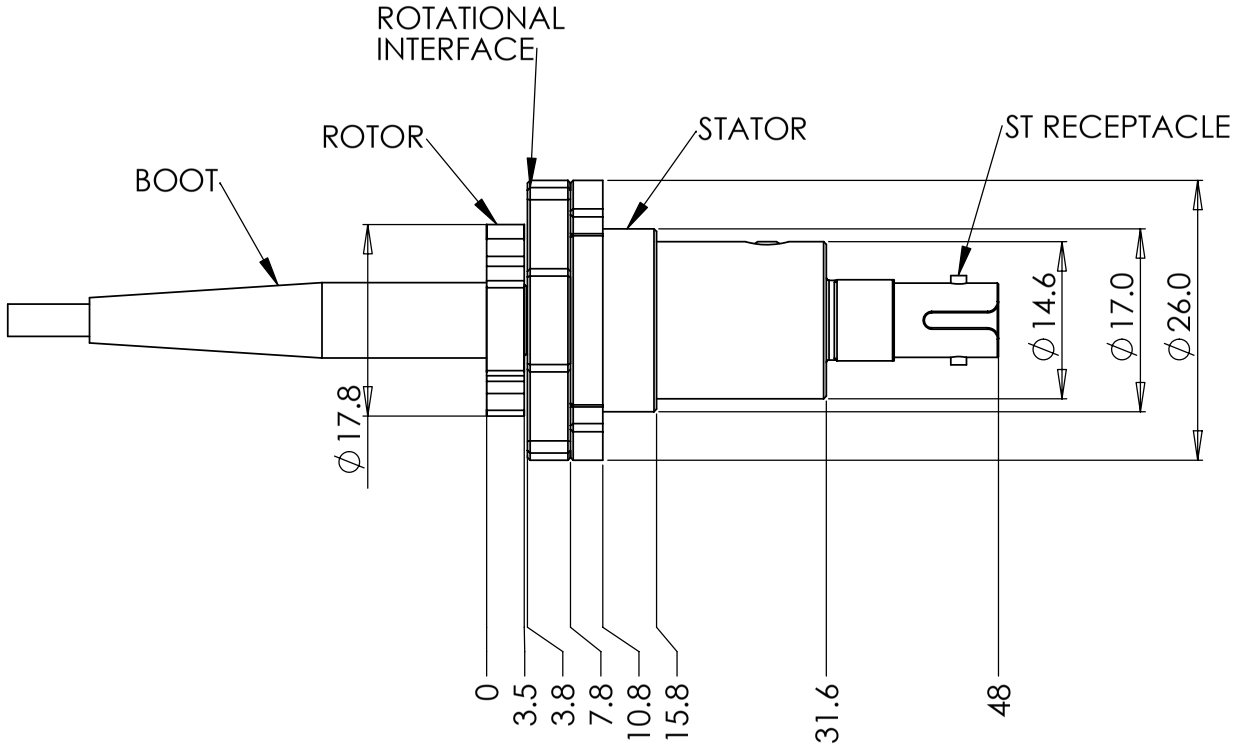

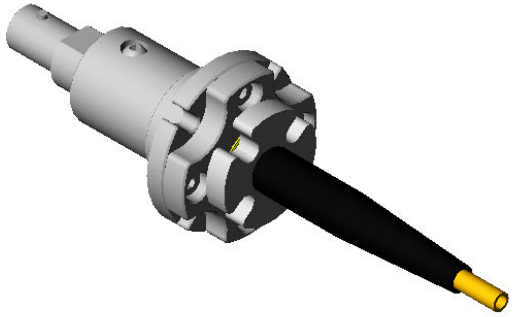

PROPRIETARY AND CONFIDENTIAL

THE INFORMATION CONTAINED IN THIS DRAWING IS THE SOLE PROPERTY OF PRINCETEL, INC. ANY REPRODUCTION IN PART OR AS A WHOLE WITHOUT THE WRITTEN PERMISSION OF PRINCETEL, INC. IS PROHIBITED.

UNLESS OTHERWISE SPECIFIED:

DIMENSIONS ARE IN mm

TOLERANCES:
ANGULAR: ± 1/2°
ONE PLACE DECIMAL ± 0.100
TWO PLACE DECIMAL ± 0.050
THREE PLACE DECIMAL ± 0.025

MATERIAL: 303 STAINLESS STEEL

	DATE	NAME
DRAWN	3/28/2006	R. Z.
CHECKED		B. Z.
ENG APPR.		
MFG APPR.		
Q.A.		

COMMENTS:

PRINCETEL, INC.

TITLE: RPTST

SIZE	DWG. NO.	REV
B	1071-00-62	4.0

PART NO.

SHEET 1 OF 1